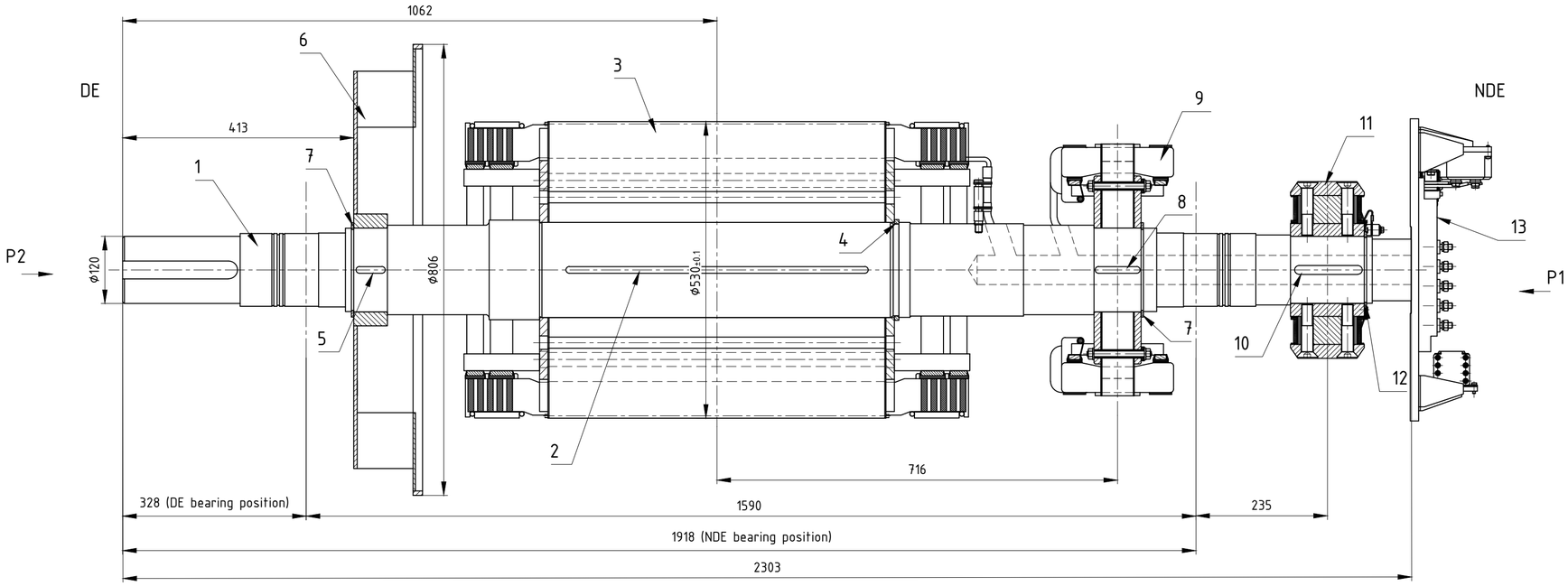

Poz. *Item.*	Kom. *Pcs.*	Naziv *Name*	Materijal *Material*	Masa/kom *Mass/pcs* (kg)	Σ Masa *Σ Mass* (kg)
1	1	Rotor shaft	C45	320	320
2	1	Parallel key 1	W.Nr.1.0503 EN 10083	1.5	1.5
3	1	Rotor winding assembly		1260	1260
4	1	Secure ring	S235JR	0.3	0.3
5	1	Parallel key 2	W.Nr.1.0503 EN 10083	0.5	0.5
6	1	Fan	S235JR	41	41
7	2	Circlip 150-DIN 471		0.15	0.3
8	1	Parallel key 3	W.Nr.1.0503 EN 10083	0.3	0.3
9	1	Exciter rotor assembly		104	104
10	1	Parallel key 4	W.Nr.1.0503 EN 10083	0.5	0.5
11	1	PMG rotor assembly		58	58
12	1	Circlip 120-DIN 471		0.15	0.2
13	1	Rectifier assembly		25	25
				Σ	1811.6

VIEW
P1
(1:4)

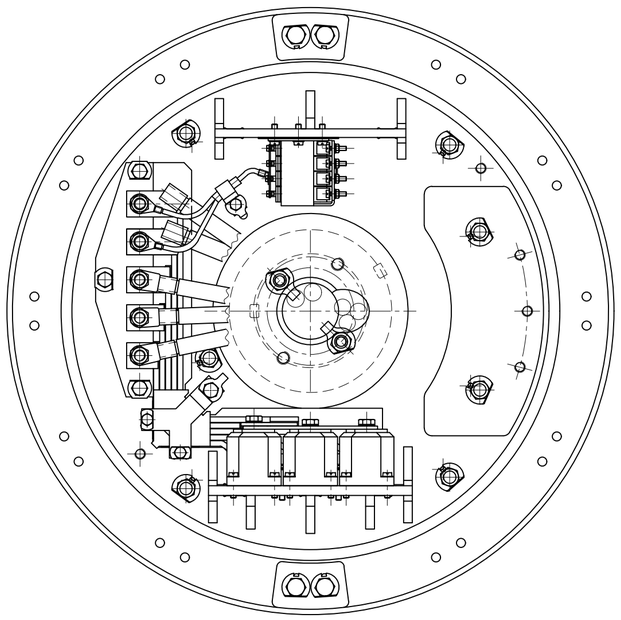

VIEW
P2
(1:5)

Direction of rotation

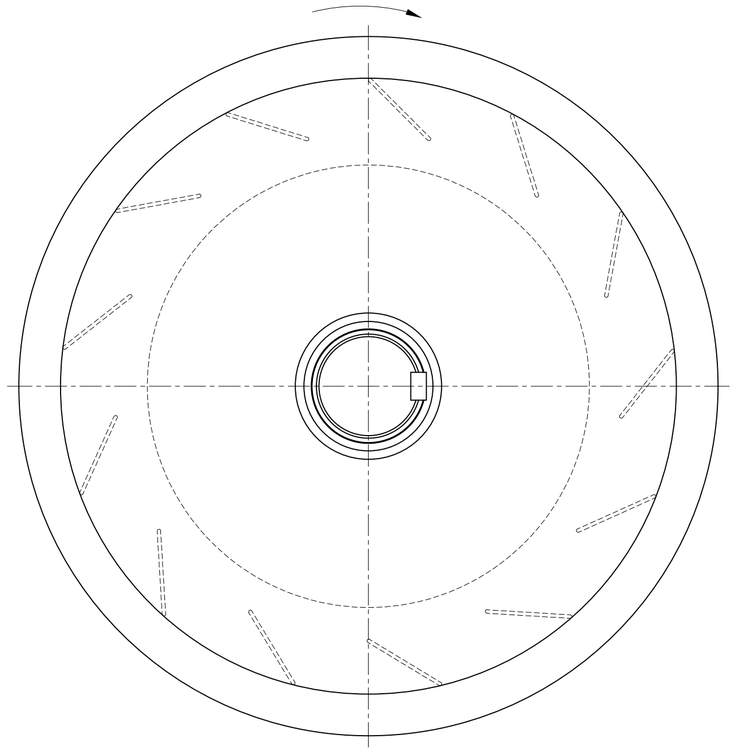

ISOMETIC VIEW

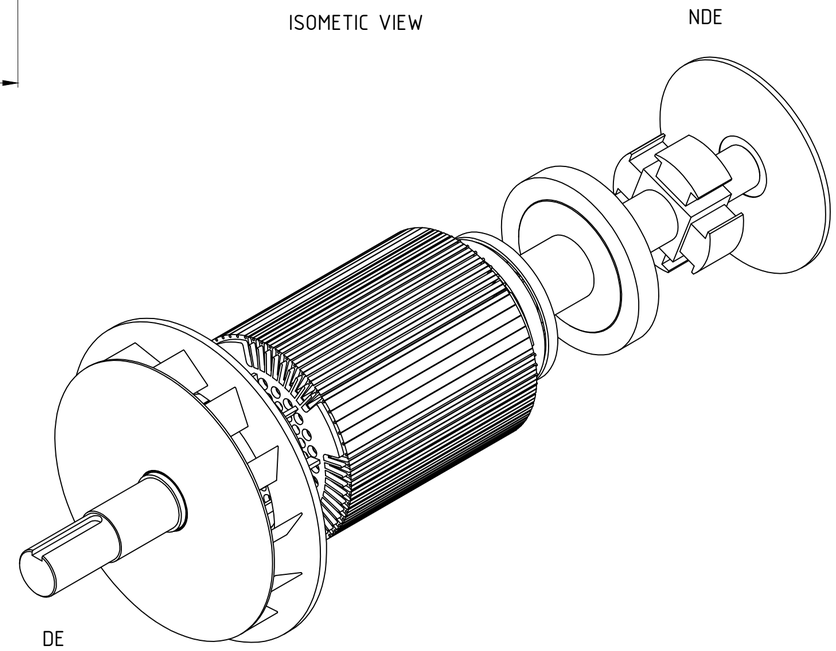

Notice:

Rotor balancing according to ISO 1940-1, balance quality grade G2.5

This document remains the exclusive property of the KONČAR G&M Inc. - ZAGREB.
Reproduction or any use not in conformity with the intended application is not permissible.

Ovaj dokument ostaje u isključivom vlasništvu KONČAR GIM d.d. - ZGREB.
Pretisak i uporaba izvan namjene nisu dopušteni.

Izdanje Issue	Promjena broj Change number	Opis promjene Change description	Datum Date	Ime Name	Potpis Signature
.	.	.	.	.	.

Mjerilo Scale: 1:7 | Format Dwg format: A2 | Masa Mass: 1811.6 kg | Sirovina Raw material: | Br. No.:

Ingeteam

MULTIPURPOSE VESSEL
B618/1 and B618/2
GENERATOR 6SBV1 450M2-4

Tolerancije slobodnh mjera Free tolerances | Kvaliteta površine Surface quality

Naziv Title: ROTOR ASSEMBLY

10/2018.	Ime Name	Potpis Signature
Konstruirao Designed:	Knežević	
Ispitao Checked:	Kljaić	
Standard Standard:	Triplat	
Odobrio Approved:	Tišljar	

KONČAR
Končar - Generatori i motori d.d.

Izvorni crtež Origin drawing:

Broj No.: M41418 | List Sheet: 1 | Listova Sheets: 1