Case S2 **SKiiP 2 GB 2-fold**

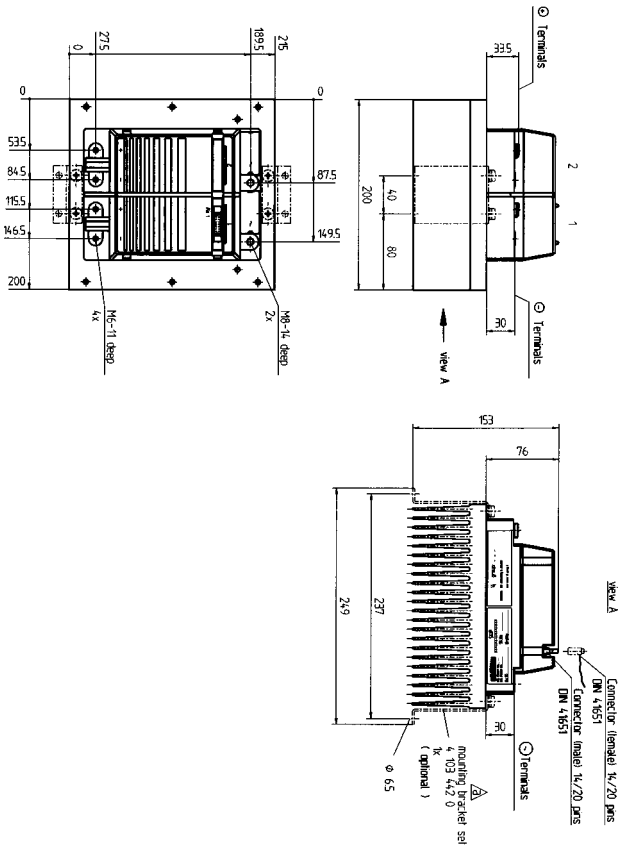

weight without heat sink: 1,85 kg
P16: 4,7 kg

Case S3 **SKiiP 2 GB 3-fold**

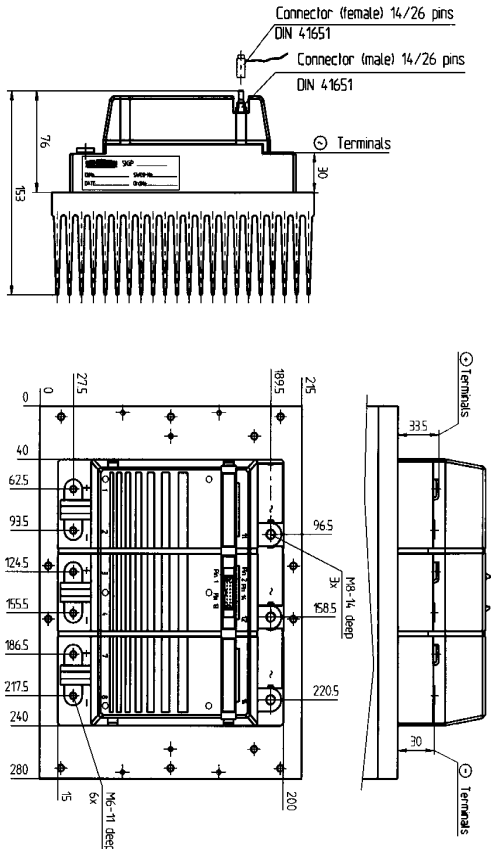

weight without heat sink: 2,72 kg
P16: 6,6 kg

Case S4 **SKiiP 2 GB 4-fold**

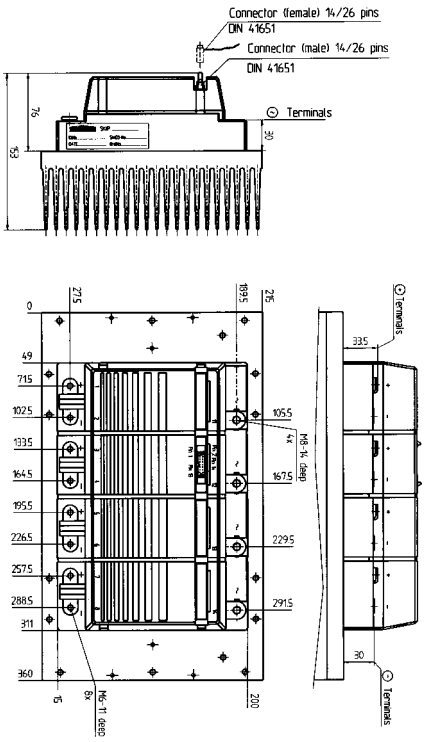

weight without heat sink: 3,54 kg
P16: 8,46 kg

Case S5 **SKiiP 2 2*GB 2-fold**

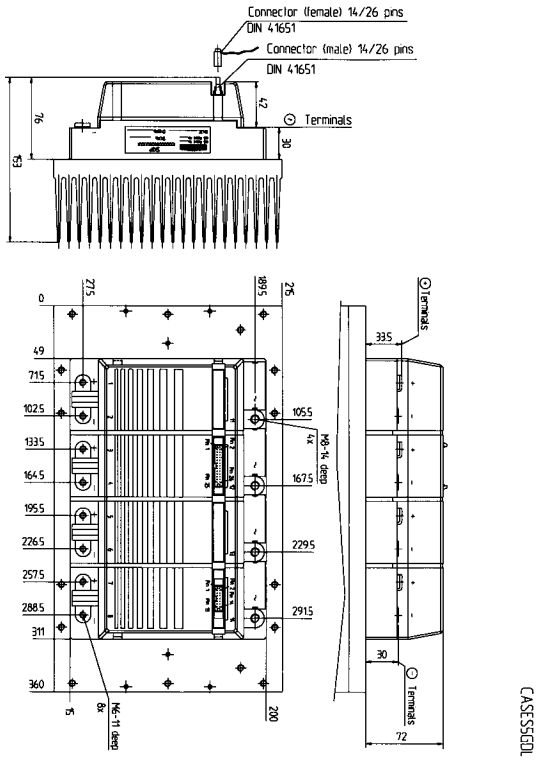

weight without heatsink: 3,54 kg
P16: 8,46 kg