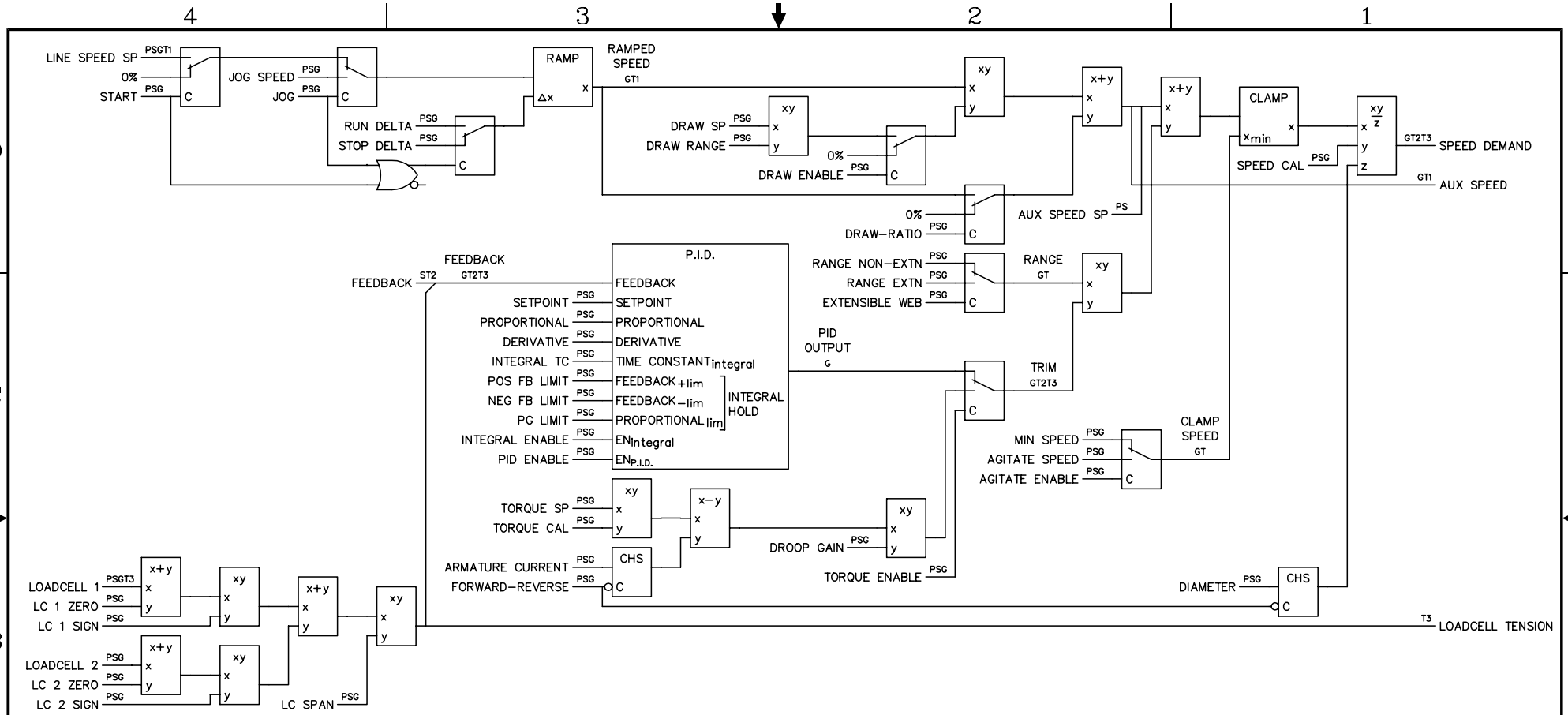

GENERAL NOTES:

1. THIS DIAGRAM DEPICTS THE RELATION OF LINK FUNCTION BLOCK DATA VARIABLES AND OPERATIONS. NAMED VARIABLES MAY POSSESS ONE OR MORE OF THE FOLLOWING ATTRIBUTES AS NOTED:
   PRESET (P) – THE VARIABLE MAY BE PRESET DURING CONFIGURATION.
   SET (S) – THE VARIABLE MAY BE CONNECTED AS AN INPUT AND MAY BE ASSIGNED A TEST POINT DURING CONFIGURATION. THE VARIABLE MAY BE MODIFIED BY SAM IN SPECIAL MODE OR IF A TEST POINT WAS ASSIGNED.
   GET (G) – THE VARIABLE MAY BE ASSIGNED A TEST POINT DURING CONFIGURATION. THE VARIABLE MAY BE EXAMINED BY SAM IN SPECIAL MODE OR IF A TEST POINT WAS ASSIGNED.
   CLOCKED (C) – THE VARIABLE IS DETERMINED AT A SPECIFIED CLOCK RATE.
   TRIGGERED (T OR Tno.) – THE VARIABLE IS DETERMINED UPON ANY PRECEDING VARIABLE EVENT OR UPON A SPECIFIC INPUT VARIABLE EVENT IDENTIFIED BY NUMBER.

SSD Shackleton system drives RESTON, VIRGINIA, USA	DWN G. KREJCI 6 MAR 91	–	SECTION CONTROL	SIZE B	DWG. NO. RF354223B
	CHK	–	LINE DRIVE/SECTION CONTROL	ISSUE A	
	APP	–	LINK FUNCTION BLOCK DATA FLOW DIAGRAM	SCALE –	SHEET 1 OF 1

KE051392B